Remote Control Technology
Simple Wireless Solutions

Phone: (866) 701-1146
Fax: (425) 216-7558
www.remotecontroltech.com

Applications Include: Pumps, Valves, Relays, Conveyors, Center Pivots, Lights, Alarm Systems, PLC Activation, Engine Controls, Wireless Automation.

Remote Switch System 1 Installation Guide

Check all wiring connections before applying power!

The Remote Switch System 1 features include multiple relay output modes and a simple to program transmitter. Multiple transmitters can be programmed to one receiver and a single transmitter can operate multiple receivers. A Micro-controller in the receiver randomly generates one of over 4 billion security code combinations. This code is then programmed into the transmitter via a link cable, which is also used for programming multiple receivers to operate from one transmitter. A 4 position DIP switch on the receiver is used to select the mode of the receiver relay output. The receiver has eight modes that control how the relay output function. The relay is a SPDT Class C rated for 5 amps @ 250VAC with Normally Open (NO), Normally Closed (NC), and a Common (C) contact.

The Remote Switch System 1 GL receiver is the key to setting up the system to run properly. The receiver is used to program the transmitter and to select how the relay outputs function when selected by the transmitter. Key components of the receiver are:

1. Supply Connections
2. Antenna Connections
3. 4 Position DIP Switch
4. Relay Timing Trim-pot
5. Coding Socket
6. Code Change Pins
7. Relay Connections

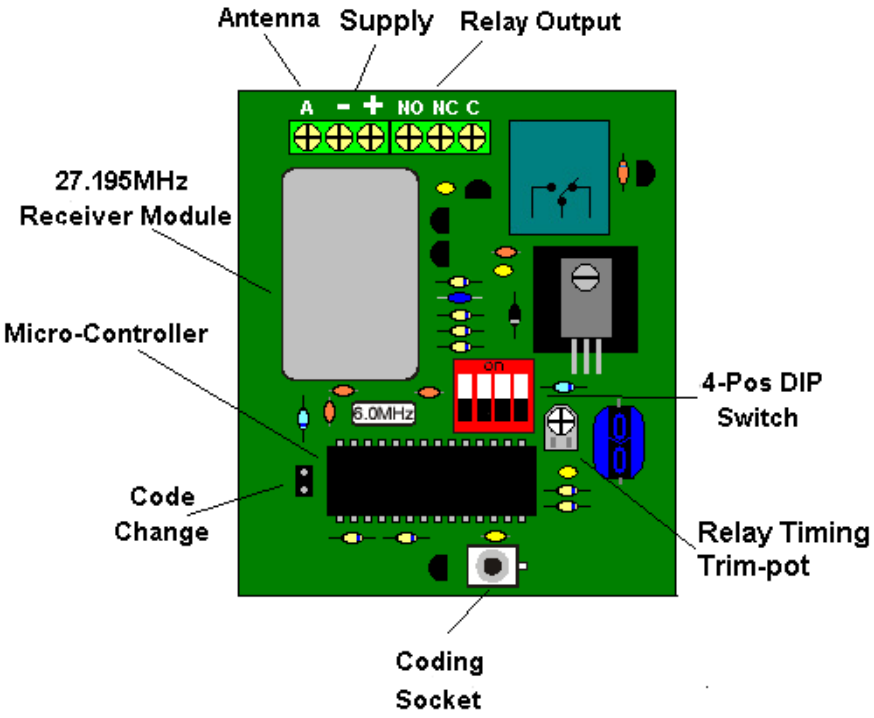

Receiver Installation Continued

RSS 1 GL Receiver Installation Instructions:

1. Open the door of the enclosure.
2. Connect the 12 VDC to the terminal block at the bottom of the receiver. Neg. 12VDC connects to the outer-right terminal marked with the"**-**" symbol. Pos 12VDC connects to the center terminal marked with the"**+**" symbol.
3. Connect your device to the output relay.
4. "NO" = a normally open contact, "C" = the common contact, "NC" = a normally closed contact.
5. Attach your antenna to the connector at the top of the receiver.
6. Double check all connections made to the receiver. Pay special attention to the polarity of power connections and the position of the relays to ensure the receiver is set up correctly.
7. Apply 12 VDC to the receiver.
8. Using a flat bladed screwdriver, short the code change pins marked by the "CC" symbol. This will randomly change the receiver security code.
9. Remove the battery cover of the transmitter to reveal the transmitter's coding socket.
10. Program the transmitter push button operation. (See Transmitter Programming)
11. Install a 9 VDC Alkaline battery and reinstall battery cover.
12. Using the 4 position DIP switch select the mode of operation for the relay. (See Receiver Relay Operation Modes)
13. Mount the RSS 1 GL Receiver inside of a larger enclosure, on a wall, or to a pole.

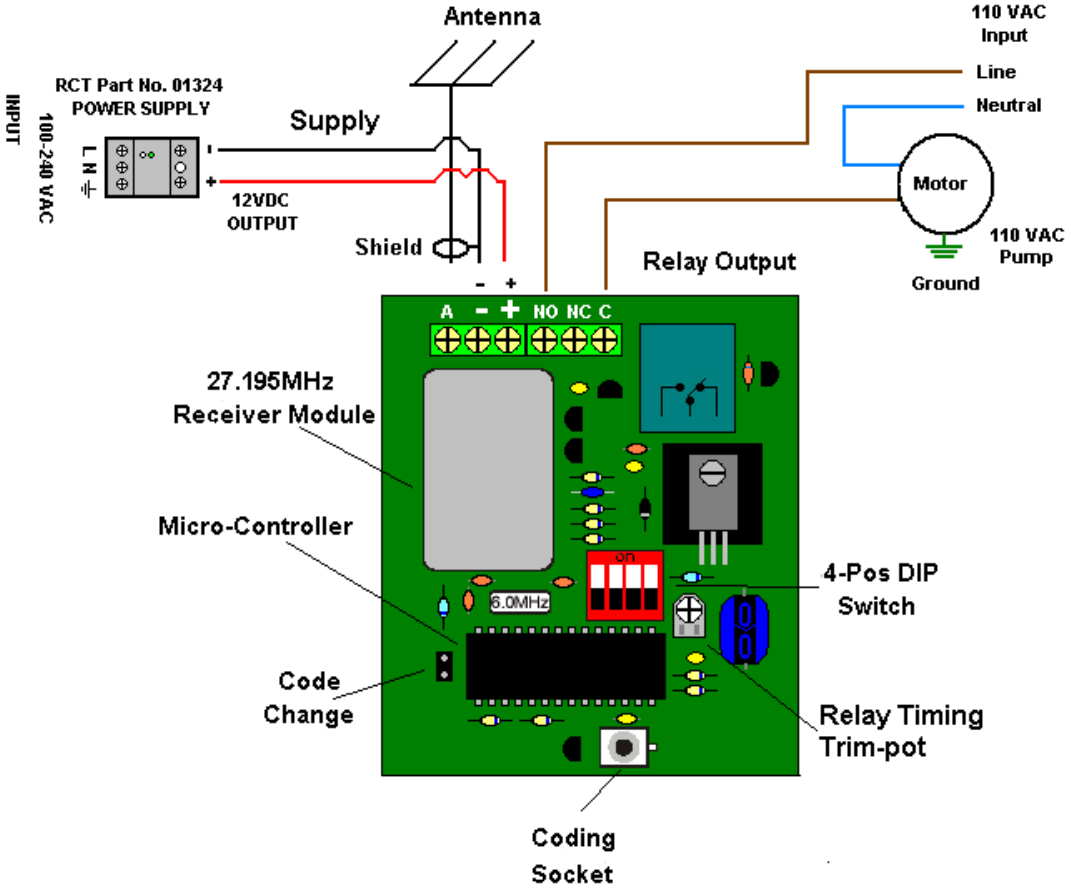

Antenna Directions

Antenna Directions:

Mount antenna outside of buildings, in a high location, away from V.F.D.'s, large electric motors or any obstructions. Use only high quality coaxial cable and antennas, which RCT can provide. (Do not loop excess coaxial cable into a coil. This will cause a RF (radio frequency) choke and reduce your signal range. If you can, loosely route it back and forth in an "S" configuration).

Transmitter Programming

RSS 1 GL Transmitter Programming:

The RSS 1 GL transmitter is a simple to operate single push button transmitter. The transmitter uses a red LED to display the status of the transmitter.

Transmitter LED Definitions	
Flashing when push button is pressed.	The LED will flash when a Push button on the transmitter is pressed. Indicating that the transmitter is transmitting.
Flashing when push button is not pressed.	This indicates that the battery is low.
Solid (ON)	Indicates the transmitter is connected to the receiver and is ready to be programmed via the link cable
Two Flashes	The LED will flash twice when the transmitter has successfully accepted the receiver programming
No LED (OFF) When Pressing Push Button	If the transmitter battery is completely dead or the transmitter is malfunctioning. The LED will not Flash. Replace Battery with a new 9 VDC Alkaline

Other features include multi-transmitter programming and multi-receiver programming. These features allow the user program multiple transmitters to control one receiver. Once a transmitter has been programmed, it can be used to program additional receivers. A red LED will blink repeatedly indicating a low battery condition.

Single Transmitter Programming:

1. Apply 12VDC to the receiver (See Receiver Installation Instructions)
2. Momentarily short the two code change pins marked with the symbol “CC” on the receiver. This will randomly change the current security code of the receiver. (Skip this step if adding additional transmitters to an existing system.)
3. Connect one end of the link cable (RED) to the coding socket of the receiver. (See Receiver Installation Instructions)
4. Remove the battery cover of the transmitter.
5. Connect the opposite end of the link cable to the coding socket just above the battery of the transmitter. Observe the LED on the keypad of the transmitter. It should be solid red. This indicates a properly installed link cable.
6. Press the push button on the transmitter keypad. Observe the LED on the keypad of the transmitter. The LED will blink twice to indicate the program is complete.
7. Disconnect the link cable form the coding socket on the transmitter, and reinstall the battery cover.
8. Disconnect the link cable from the coding socket on the receiver.
9. Using the 4 position DIP switch on the receiver, select the mode of operation for the relays. (See Receiver Relay Operation Modes)

RSS 1 GL Transmitter
PN: 5109T

Transmitter Programming Continued

Multi-Transmitter Programming:

1. Follow steps 1, 3 – 8 of single transmitter programming for each additional transmitter.
2. Skip step 2. This will change the security code of the receiver.
3. Using the 4 position DIP switch on the receiver, select the mode of operation for the relays. (See Receiver Relay Operation Modes)

Multi-Receiver Programming:

1. Follow step 1 of single transmitter programming.
2. Short the two code change pins marked with the symbol “CC” on the receiver. Maintain the short until Programming is complete.
3. Follow steps 3 – 8 of single transmitter programming. *Note: The battery is required during this step and transmitter LED will NOT illuminate when the link cable is installed. The LED will blink rapidly when the transmitter button is pressed to program the receiver.*
4. Using the 4 position DIP switch on the receiver, select the mode of operation for the relays. (See Receiver Relay Operation Modes)

Receiver Relay Operation Modes

Relay Operation Modes:

The relay is a SPDT Class C relay rated for 5 amps @ 250VAC with Normally Open (NO), Normally Closed (NC), and a Common (C) contact. The receiver has eight modes that control how the relay outputs function. These modes are user selectable using the 4 Position DIP switch on the receiver. *NOTE: Turn the trim pot counter clockwise to decrease the relay time duration and clockwise to increase the relay time duration.* The eight modes function as follows:

	Momentary: Move all the switches to the “OFF” position. This will set the relay in momentary mode. In momentary mode, the relay will change its state and maintain it for the duration of the transmission received. Once the transmission is terminated, the relay will change back to its original state.
	Flip-Flop: Move switch “1” to the “ON” position. This will set the relay in Flip-Flop mode. In Flip-Flop mode, the relay will change its state and maintain it until a matching transmission is received. Every time a transmission is received, the relay will change its state and maintain it until another transmission is received.
	Delayed OFF 1: Move switch “2” to the “ON” position. This will set the relay in Delayed OFF 1 mode. In Delayed OFF 1 mode, the relay will change its state and maintain it for 1-10 seconds. This is adjustable using the relay timing trim-pot
	Delayed OFF 2: Move switches “2” & "3" to the “ON” position. This will set the relay in Delayed OFF 2 mode. In Delayed OFF 2 mode, the relay will change its state and maintain it for 10-300 seconds. This is adjustable using the relay timing trim-pot
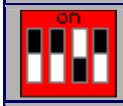	**Pulsing:** Move switch “3” to the “ON” position. This will set the relay in Pulsing mode. In Pulsing mode, the relay will change its state repeatedly for 10-300 seconds. This is adjustable using the relay timing trim-pot
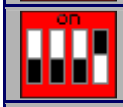	**Latching:** Move switches "1- 3” to the “ON” position. This will set the relay in Latching mode. In Latching mode, the relay will change its state and maintain it until power to the receiver is removed or interrupted.
	ON - OFF: Move switches “1” & "2” to the “ON” position. This will set the relay in ON - OFF mode. This Mode requires a two push button transmitter. Push Button "1" changes the state of the relay. Push Button "2" returns the relay to it's original state.
	Test: Move switch “4” to the “ON” position. This will set the relay in Test mode. In Test mode, the relay will change its state and maintain it until switch "4" is in the "off" position.